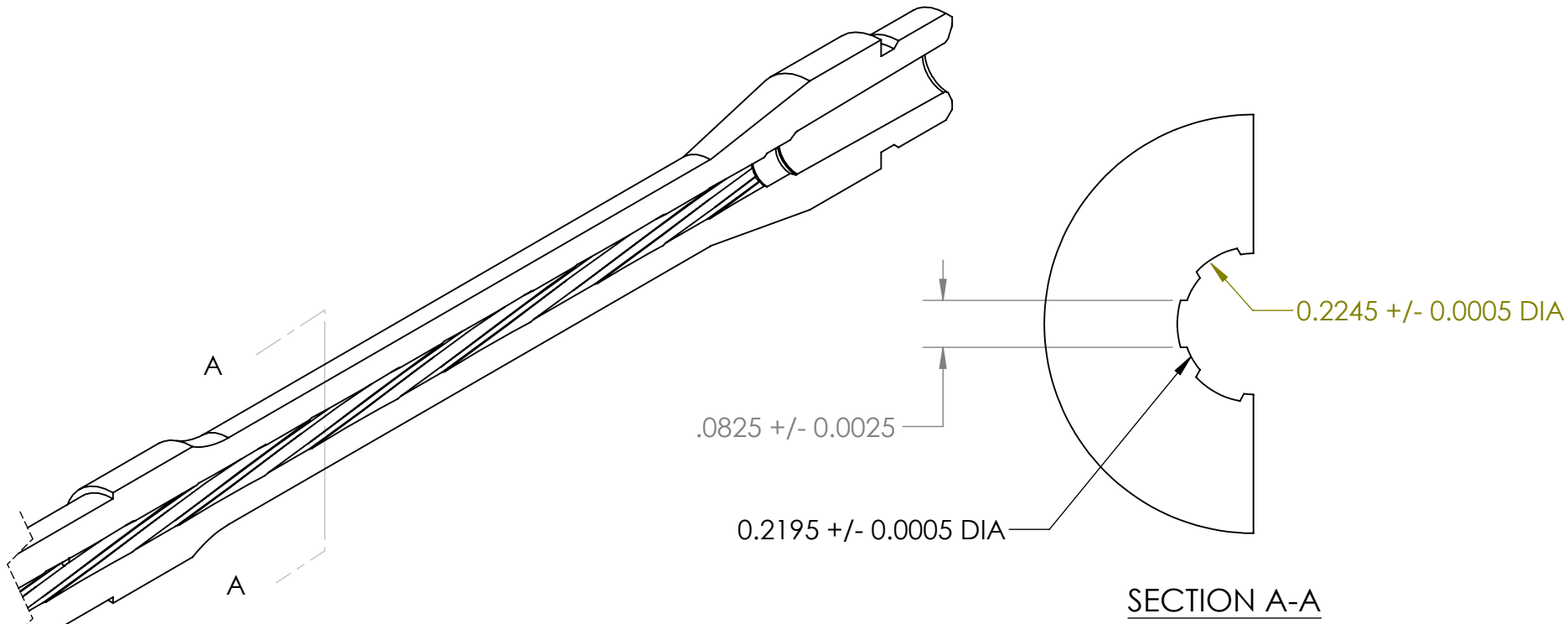

RIFLING DATA

6 Grooves - 0.0825 +/- 0.0025 Wide equalliy spaced
Twist - 1 turn / 7 inches Right Hand
Helix Angle - 5* 35'
Groove Dia - 0.2245 +/- 0.0005
Bore ID - 0.2195 +/- 0.0005

Standard Tolerances	
X.XXXX	0.0005
X.XXX	0.002
X.XX	0.01
NEXT ASSY	USED ON
APPLICATION	

UNLESS OTHERWISE SPECIFIED:

DIMENSIONS ARE IN INCHES
TOLERANCES:
FRACTIONAL ±
ANGULAR: MACH ± BEND ±
TWO PLACE DECIMAL ±
THREE PLACE DECIMAL ±

INTERPRET GEOMETRIC TOLERANCING PER:

MATERIAL

FINISH

DO NOT SCALE DRAWING

	NAME	DATE
DRAWN		
CHECKED		
ENG APPR.		
MFG APPR.		
Q.A.		

COMMENTS:

Ballistic Advantage

TITLE:

5.56 Rifling Detail

1/7 Twist

SIZE	DWG. NO.	REV
A	556 1-7 Rifle	
SCALE: 1:4	WEIGHT:	SHEET 1 OF 1

PROPRIETARY AND CONFIDENTIAL
THE INFORMATION CONTAINED IN THIS DRAWING IS THE SOLE PROPERTY OF **Ballistic Advantage**. ANY REPRODUCTION IN PART OR AS A WHOLE WITHOUT THE WRITTEN PERMISSION OF **Ballistic Advantage** IS PROHIBITED.

5 4 3 2 1